IY3660 – Applications of Cryptography

Week 7 – Recap quiz

Elizabeth Quaglia
Information Security Group

What is this?

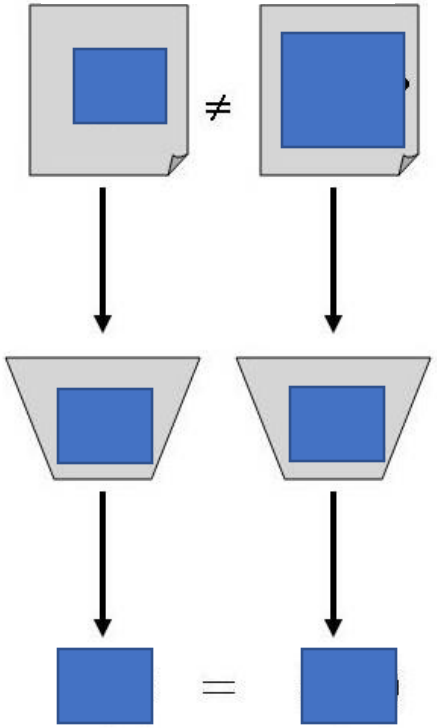

Second pre-image resistance

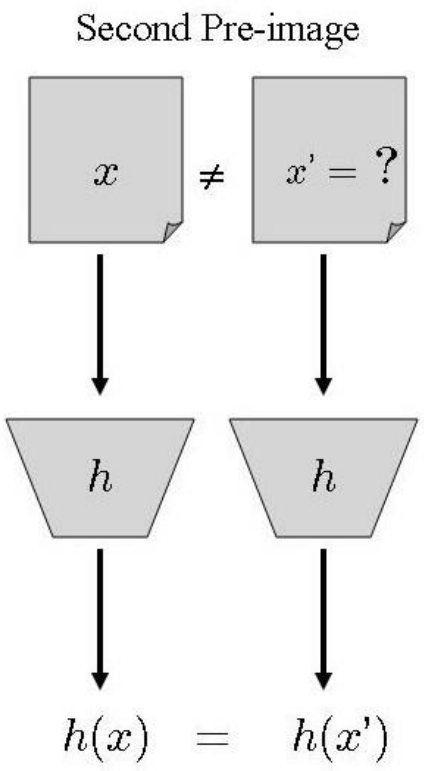

What is this?

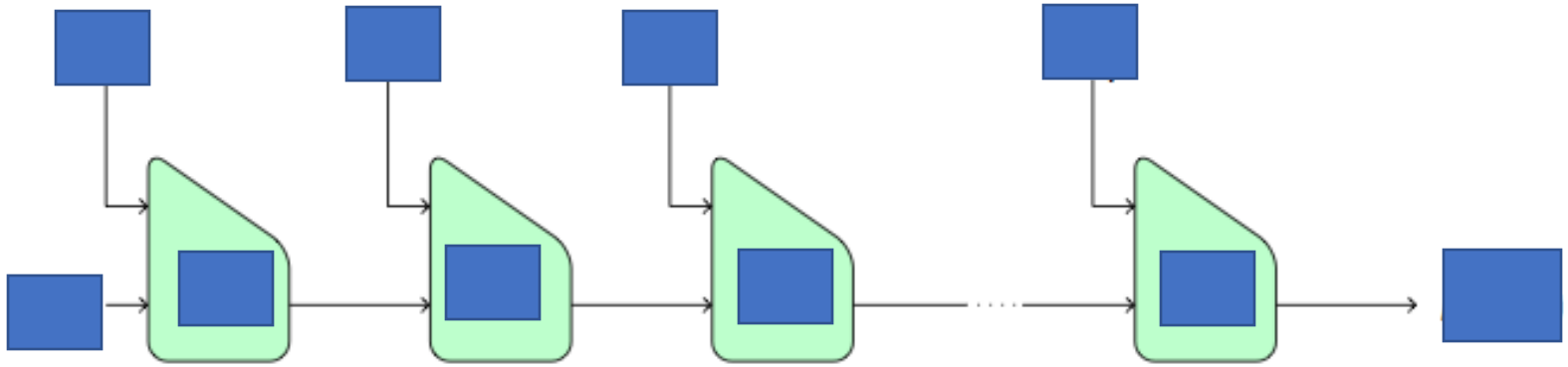

Merkle-Damgard construction

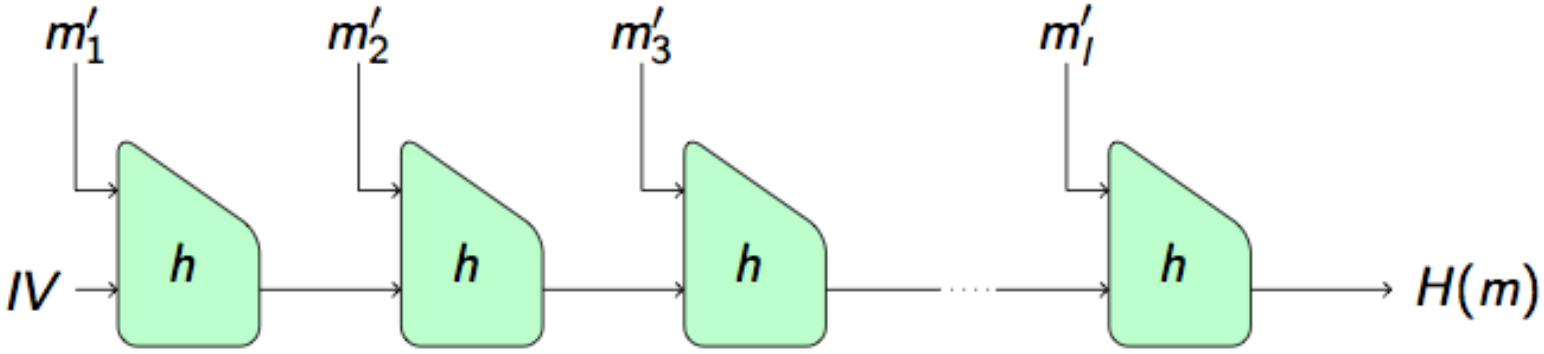

What is this?

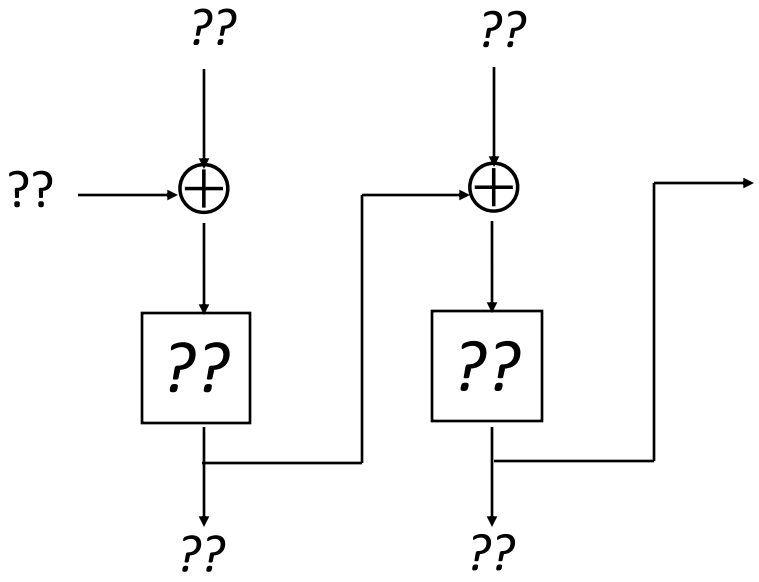

Cipher Block Chaining (CBC) mode

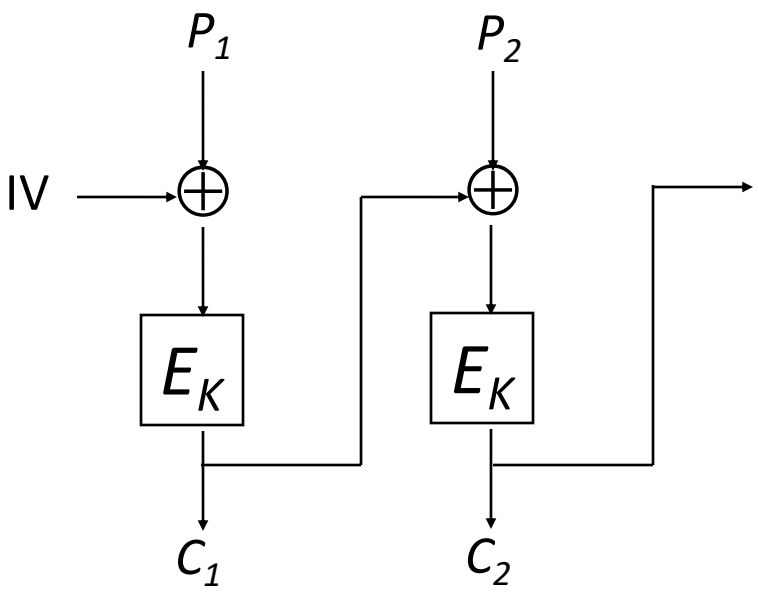

Complete the IND-CPA game

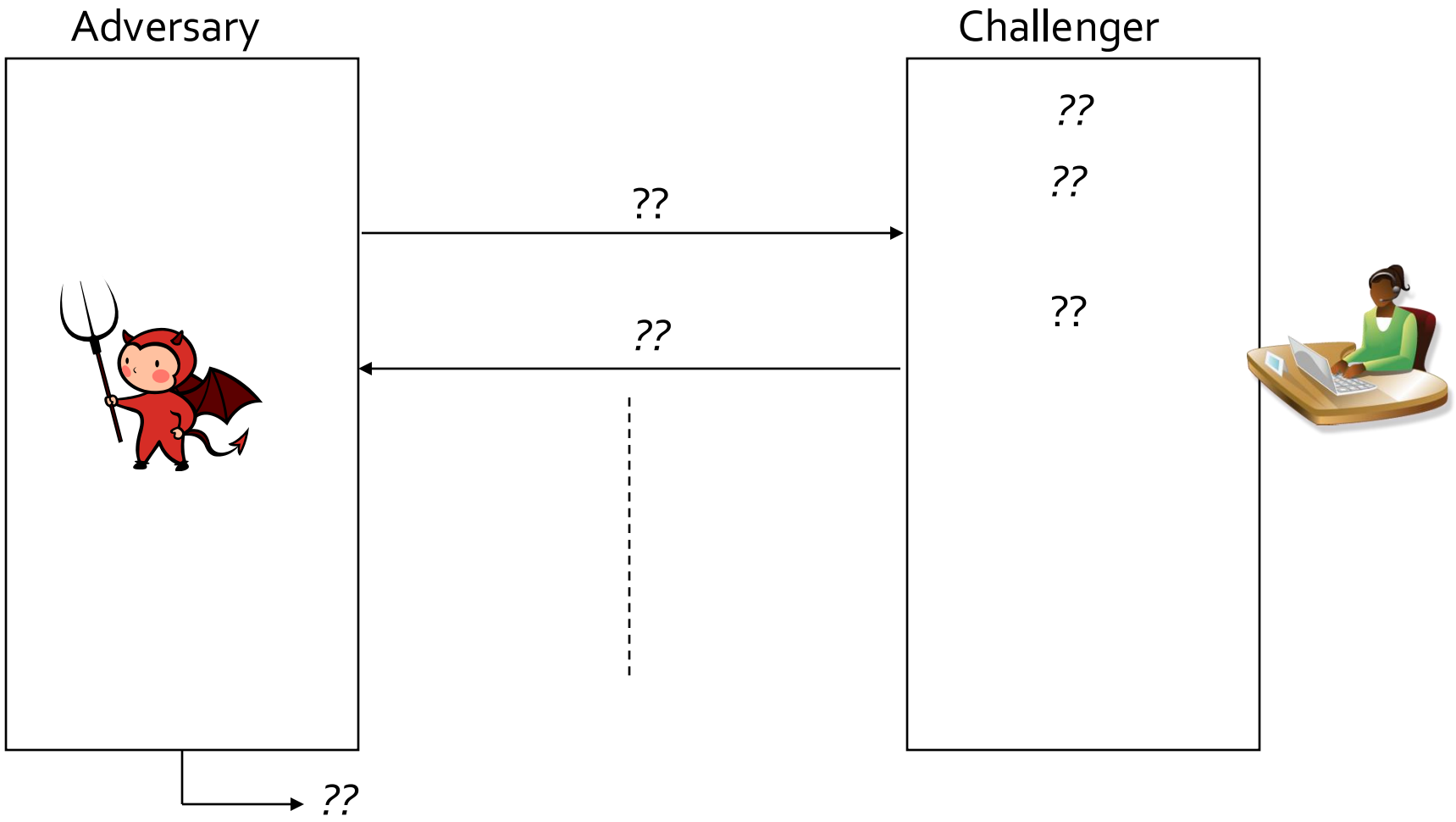

IND-CPA

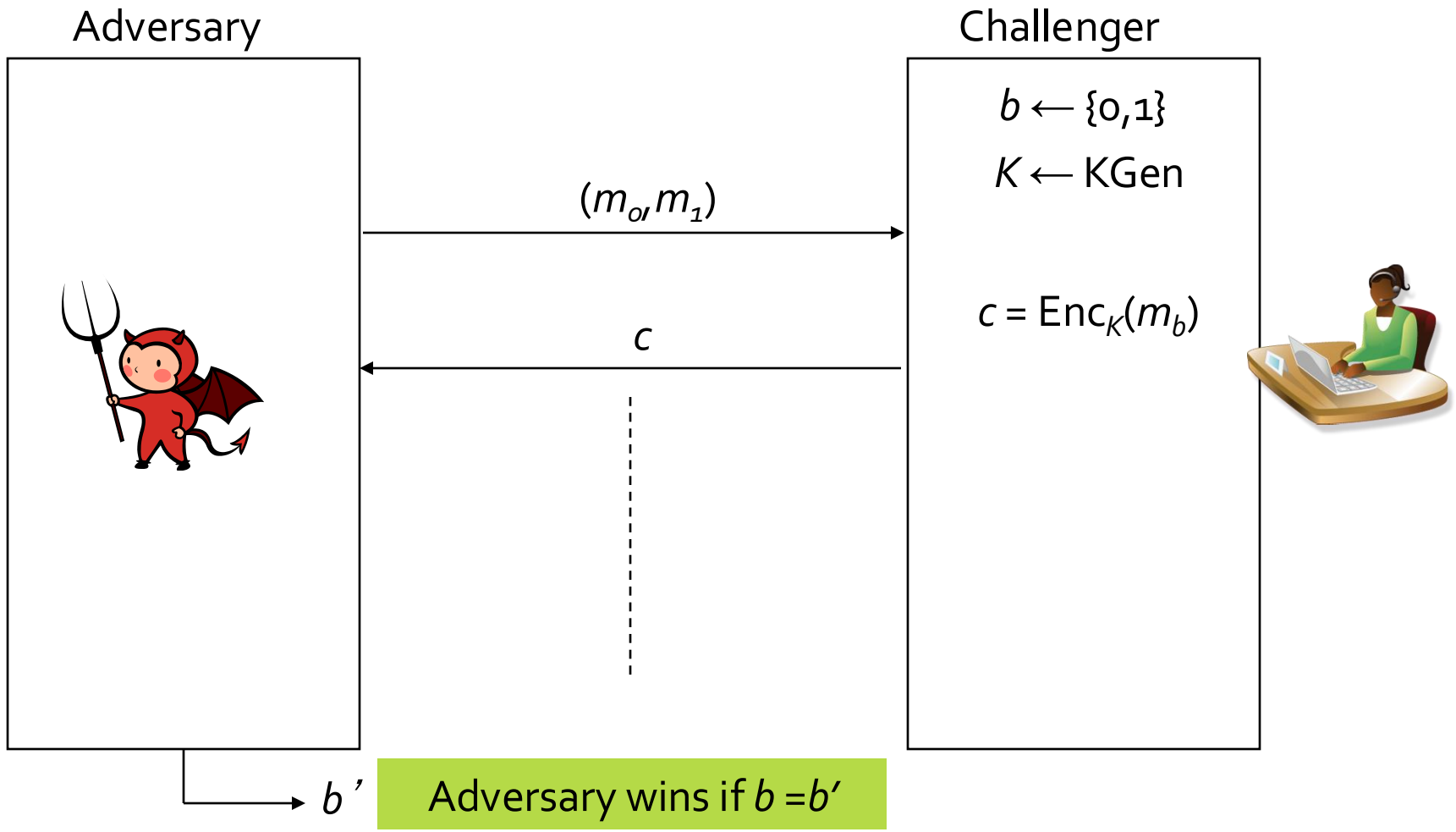
Adversary
Challenger
$b \leftarrow \{0,1\}$
$K \leftarrow \mathrm{KGen}$
(m_0, m_1)
$c = \mathrm{Enc}_K(m_b)$
c
b'
Adversary wins if $b = b'$